Ellington Valley Technologies, Inc.

SMAART™ Pulse Startup Guide

September 30, 2026
Rev B

REVISION BLOCK

Rev	Change Description	ECO	Date
A	Initial release.	-	09/01/26
B	Administrative changes.	ECO-40	09/30/26

© 2026 Ellington Valley Technologies

Copyright Notices and Disclaimers

© Copyright 2026 Ellington Valley Technologies, Inc. All rights reserved.

Ellington Valley Technologies is a registered trademark of Ellington Valley Technologies, Inc. in the United States.

All rights reserved. No part of this work may be reproduced or transmitted in any form or by any means, electronic or mechanical, including photocopying and recording, or by an information storage or retrieval system, except as may be expressly permitted in writing by Ellington Valley Technologies, Inc.

SMAART™ is a trademark of Ellington Valley Technologies, Inc.

About this Manual

This manual provides instructions for safe installation, set-up, and operation of the equipment. Before installing or operating the equipment, please read the entire manual and observe all hazard notices, symbols, and labels on the equipment and in the manual.

Technical Support and Contact Information

Safe and reliable operation of this equipment is conditional on all installation, operation and maintenance procedures being carried out in accordance with the appropriate manuals, by personnel having appropriate qualifications, experience, and training. Failure to observe the requirements of the manual may result in the user being held responsible for the consequences and may invalidate any warranty.

Customer Support	+1 (860) 661-1424 support@EllingtonValley.com

Manufacturer Address

SMAART™ Pulse Manufacturing Site
Ellington Valley Technologies Inc.
32 North Road
East Windsor, CT 06088
U.S.A.

Table of Contents

Copyright Notices and Disclaimers 3

About this Manual 3

Technical Support and Contact Information 3

Manufacturer Address 3

1. Safety Information 6

Hazard Notices Used 6

Symbols Used on the Equipment 6

General Safety Precautions 7

2. SMAART™ Pulse Overview 8

SMAART™ Pulse Hardware Overview 8

3. Facility and Installation Requirements 10

Installation Site Requirements 10

Drawings and Figures 11

Initial Inspection 13

System Storage 13

Initial Setup 14

Overview of Mechanical and Gas Connections 14

Customer Supplied Gas Lines and Connection 15

4. SMAART™ Pulse Setup and Use 16

Initial Startup 16

Manual Pump Control 16

Remote Automatic Pump Control 16

Heater Control Zones 17

Changing Temperature Setpoints 18

Auto-Tuning Controllers 18

Flow Control 19

SMAART™ Transport Plumbing and Control 19

Filter Removal and Replacement 20

Appendix A. Recommended Parts & Spares 21

© 2026 Ellington Valley Technologies

THIS PAGE INTENTIONALLY LEFT BLANK

© 2026 Ellington Valley Technologies

1. Safety Information

The chapter identifies potentially hazardous conditions which may be present during installation, operation, and serving of the equipment. The equipment is intended for indoor use in a dry, clean environment.

Hazard Notices Used

The equipment poses potential hazards during installation, operation, and service. In this manual, there are four levels of safety precautions and importances that conform to ANSI Z535 and ISO 3864. These hazard notices identify the hazard, explain how to avoid the hazard, and identify probably consequences of not avoiding the hazard. These notations are provided primarily in the procedural sections and are intended to complement the ANSI and/or ISO safety labels physically located on the equipment.

⚠ DANGER	**Avoid hazard.** Danger notifications indicate a hazardous situation which, if not avoided, **will** result in serious injury or death. The hazard is imminent.
⚠ WARNING	**Avoid hazard**. Warning notifications indicate a hazardous situation which, if not avoided, **could** result in serious injury or death. The hazard is possible.
⚠ CAUTION	**Avoid hazard.** Caution notifications indicate a hazardous situation which, if not avoided, could result in minor to moderate injury and/or equipment damage.
NOTICE	Notice notifications provide information to follow to avoid damaging system hardware or losing data.

Symbols Used on the Equipment

	ON (Power) *IEC 60417, No. 5007*
	OFF (Supply) *IEC 60417, No. 5008*
	Protective Earth Terminal (Ground) *IEC 60417, No. 5019*
	Warning: Hot Surface *ISO 7010, W017*
	Electronics Waste *The equipment should not be discarded as unsorted waste but must be sent to separate collection facilities for recovery and recycling.*

© 2026 Ellington Valley Technologies

General Safety Precautions

This section lists the hazards that could be encountered when installing, operating, and/or servicing the equipment. More specific hazards are listed throughout the manual in the relevant sections.

⚠WARNING	**Personal Protective Equipment (PPE).** When handling/using chemicals for preparation or use within the equipment all applicable local and national laboratory safety practices must be followed. This would include, but is not limited to, following general laboratory and chemical handling safety practices, use of all relevant engineering controls such as ventilation hoods and, appropriate selection and use of PPE. Failure to adhere to laboratory safety practices could lead to injury or death.
	Application Suitability. It is the customer's responsibility to determine the suitability and hazards of the equipment for a given application. Ellington Valley Technologies makes no representation that the potential hazards presented in this manual are the only hazards associated with this system and its installation, operation, and maintenance.
	Shock Hazard. The equipment must be de-energized during all maintenance and service operations. Failure to comply could result in injury or death.
⚠CAUTION	Only trained and experienced operators should perform maintenance and repairs. Contact Ellington Valley Technologies for service and/or training.
	Do not substitute parts or modify equipment. Do not install substitute parts or perform any modifications to the hardware that have not been authorized by Ellington Valley Technologies.
	Use the proper power cord. Use the proper power cord. Only use a detachable power cord that is rated for the voltage and current specified on the equipment nameplate. The power cord should have a minimum cross-sectional area of 0.75 mm2 (18AWG). The power cord should be certified by an appropriately qualified agency such as UL, VDE, or Semko.
	Burn Hazard. The equipment utilizes heating elements to maintain the gas temperature at high setpoints which could cause a burn. Do not touch any areas around the labelled area with exposed skin.

© 2026 Ellington Valley Technologies

2. SMAART™ Pulse Overview

This chapter introduces the SMAART™ Pulse, explains the principle of operation, and provides an overview of the major components.

The SMAART™ Pulse is an open-framed heated sampling pump controller designed to simplify sample delivery with portability and convenience in mind. When paired with EVT's SMAART™ Transport or SMAART™ Transport Pro, the SMAART™ Pulse unlocks higher levels automation and efficiency in modern emissions testing workflows.

SMAART™ Pulse Hardware Overview

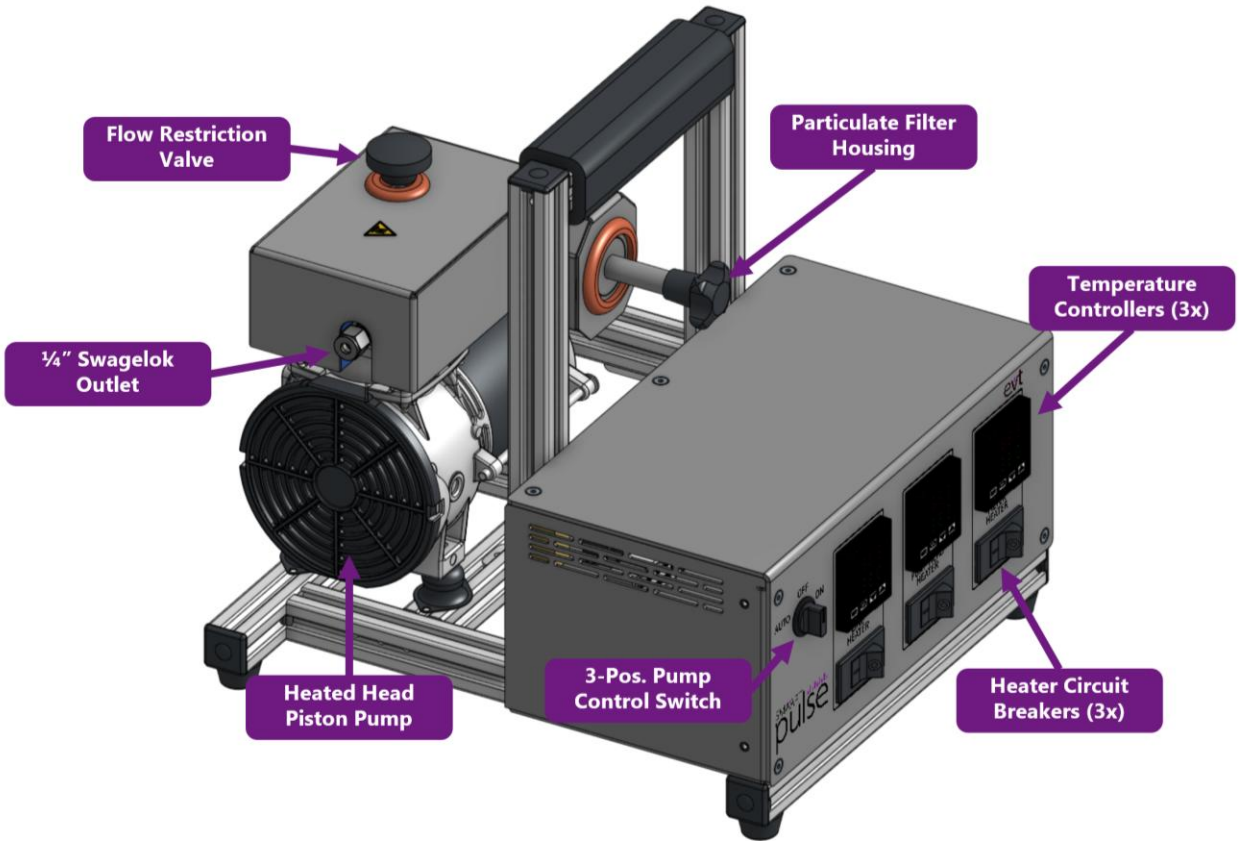

© 2026 Ellington Valley Technologies

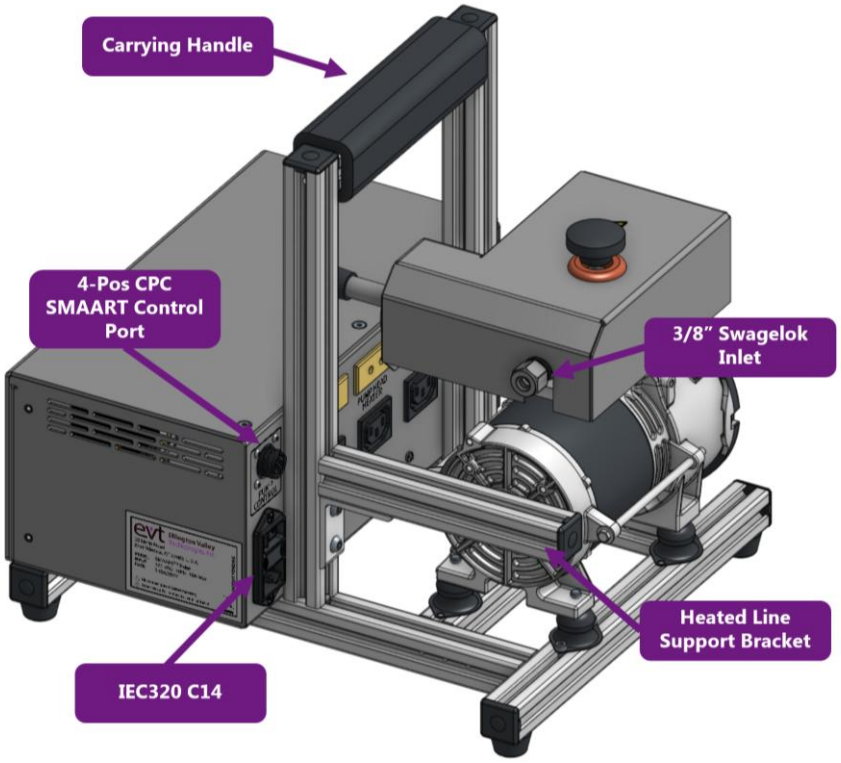

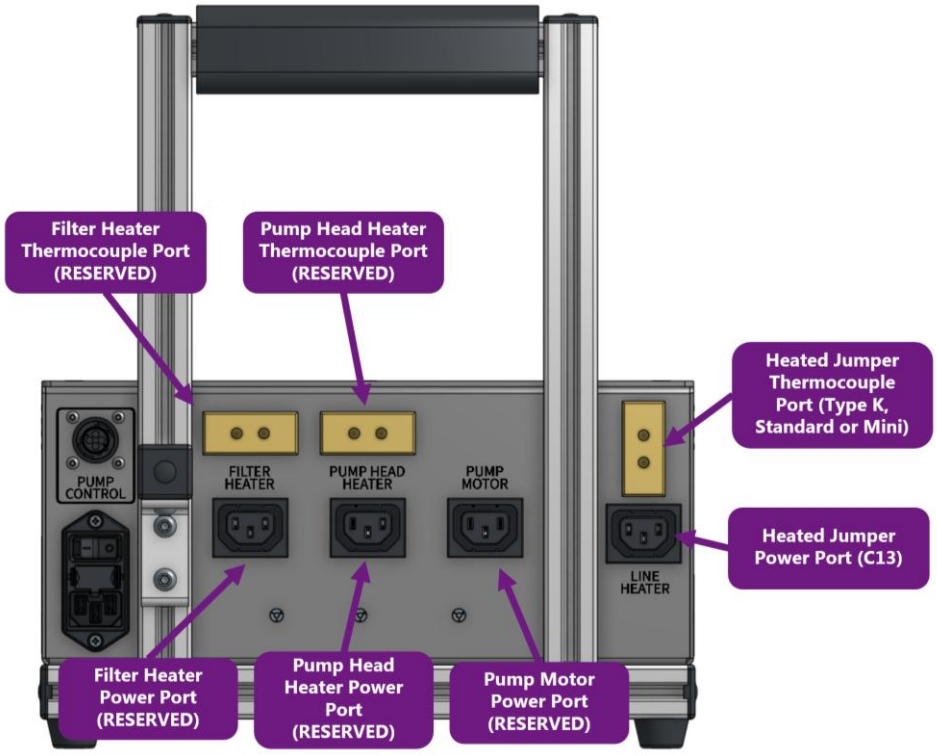

© 2026 Ellington Valley Technologies

3. Facility and Installation Requirements

This chapter describes how to prepare a site for installation, as well as procedures for uncrating the equipment and initial set-up.

⚠CAUTION Do not attempt to install, commission, maintain, or operate this equipment unless you have been trained or are an experienced instrument technician.

Installation Site Requirements

Table 3.1. Facilities Requirements

Condition	Requirement	Cords / Tubing	Fittings
Power (NA, 120V)	120VAC, 60 Hz, 10A MAX		
Sample Inlet		3/8” Heated Line	3/8" Swagelok
Sample Outlet		1/4" Heated Line	1/4" Swagelok
Pump Control Cable		4-Conductor CPC Cable	

Table 3.2. Environmental Requirements

Condition	Requirement
Operating Temperature	0 to 40°C
Humidity	5-95% non-condensing
Altitude	0-2500 m
Storage Temperature	See Table 3.5 for storage requirements.
Overvoltage Category	**Category II.** Equipment with plug and socket connector or fixed connection supplied from the electrical system of a building.
Pollution Degree	**Pollution Degree 2.** Normally only nonconductive pollution occurs. Temporary conductivity caused by condensation is to be expected.
Mains Supply Voltage Fluctuations	± 5%

Table 3.3. Installation Dimensions

SMAART™ Pulse	Dimension (W x H x D)	Weight
Imperial Measurements	12 x 15 x 14”	25 lbs.
Metric Measurements	305 x 380 x 360mm	11.3 kg

Table 3.4. SMAART™ Pulse Fuses and Circuit Breakers

Location	Identifier	Value	Description
Power Inlet	T10A/250	10A Fuse	Full system fuse.
Front Panel	LINE HEATER	15A CB	Line heater short circuit protection.
Front Panel	PUMP HEAD HEATER	15A CB	Pump head heater short circuit protection.
Front Panel	FILTER HEATER	15A CB	Filter heater short circuit protection.

© 2026 Ellington Valley Technologies

Drawings and Figures

Front View

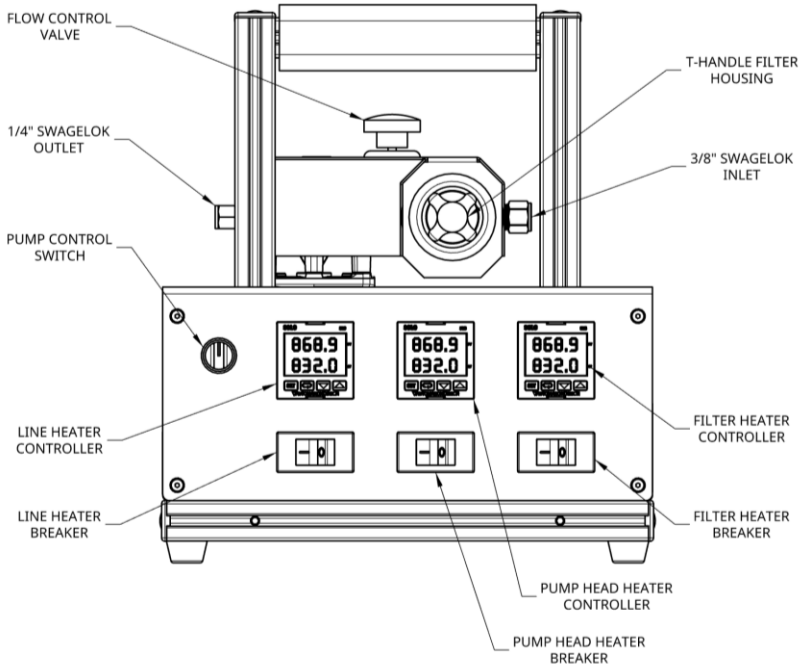

Rear View

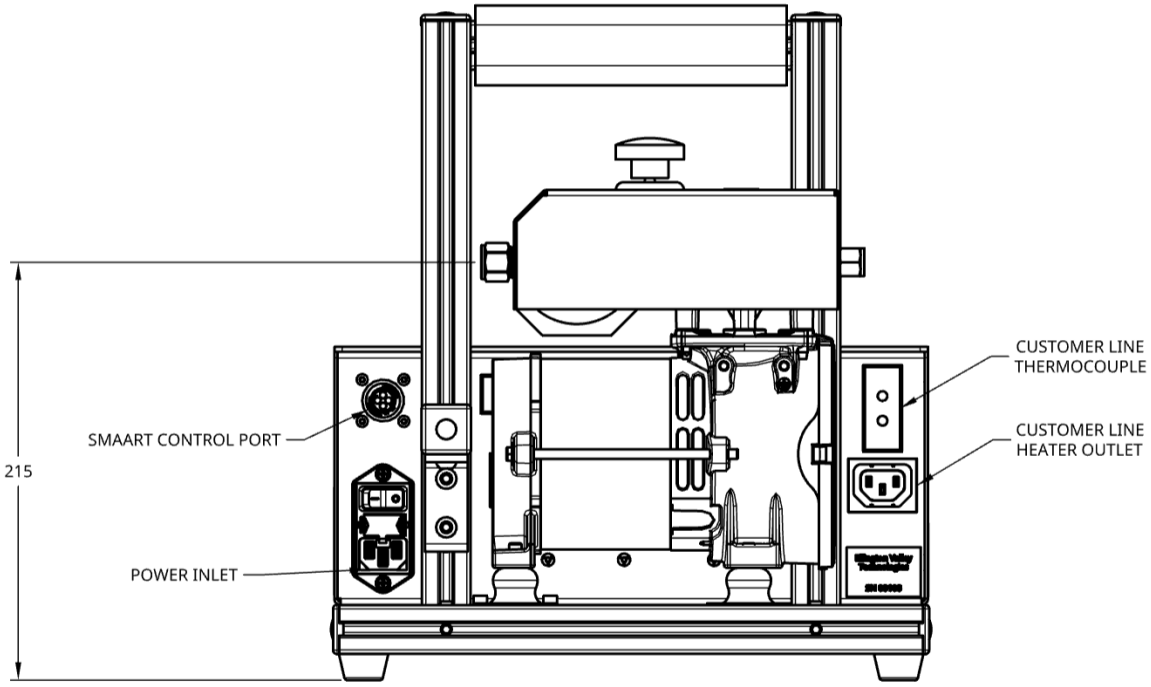

© 2026 Ellington Valley Technologies

Side View

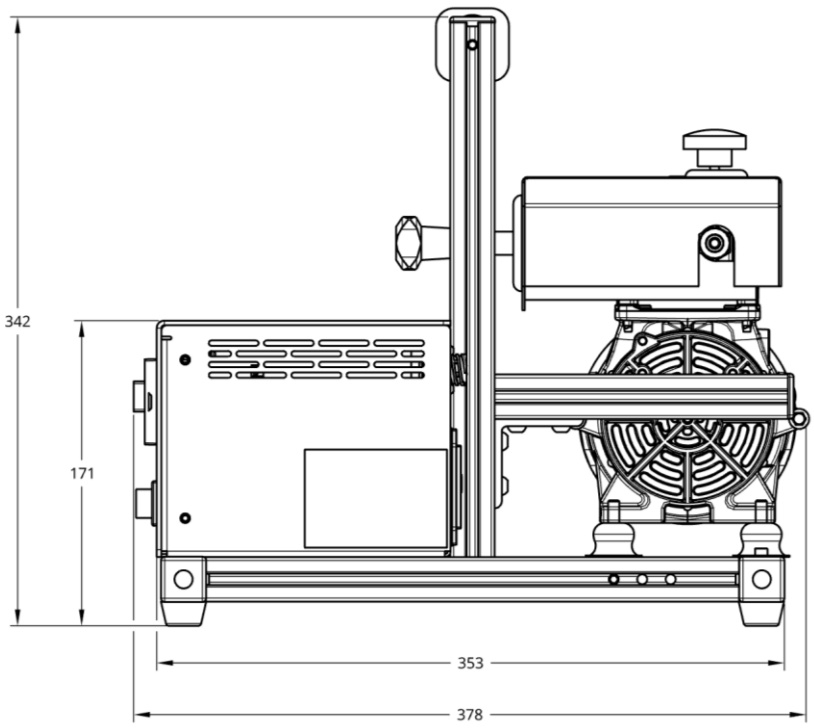

Top View

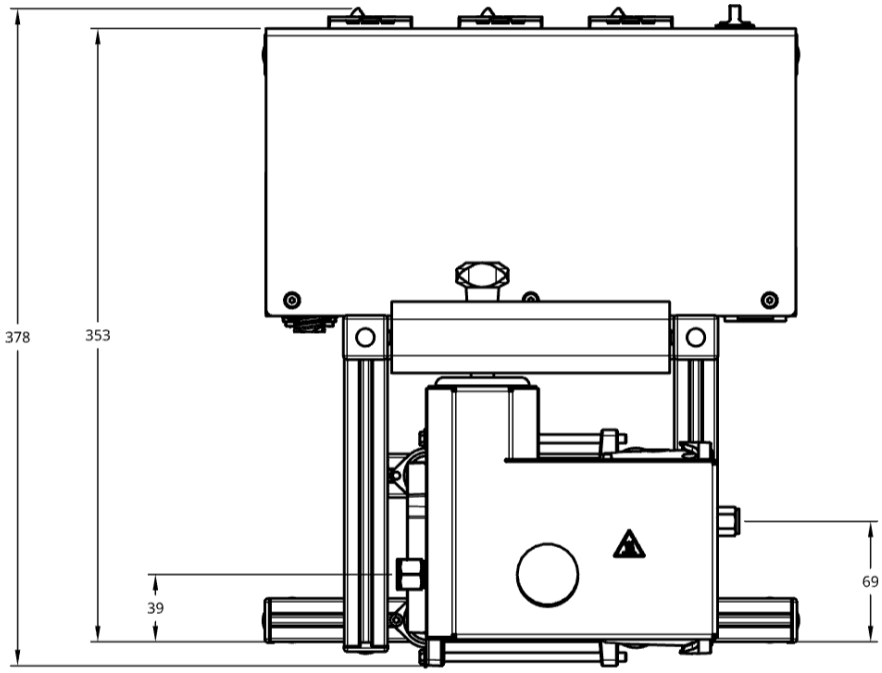

© 2026 Ellington Valley Technologies

Initial Inspection

The equipment is carefully packed to reach its destination in excellent condition. When the equipment is received, inspect the box for damage. If any damage is found, notify the freight carrier and Ellington Valley Technologies immediately. If it is necessary to return the equipment, obtain an RMA Number before shipment. The original packing materials are required to return the instrument, and the use of unsuitable packing material during return shipment will void the instrument warranty.

⚠CAUTION	Unpacking the equipment cold may result in damaging condensation on the electronic components. Allow 24 hours for the equipment to reach room temperature before unpacking from the box.

System Storage

If the system needs to be stored before installation, ensure the system is stored in its original packaging in an area that both humidity and temperature controlled to the following conditions:

Table 3.5. System Storage Requirements

Condition	Requirement
Temperature	-10 to 70°C
Humidity	5-95%, non-condensing
Packaging	Original packaging must stay closed.

© 2026 Ellington Valley Technologies

Overview of Mechanical and Gas Connections

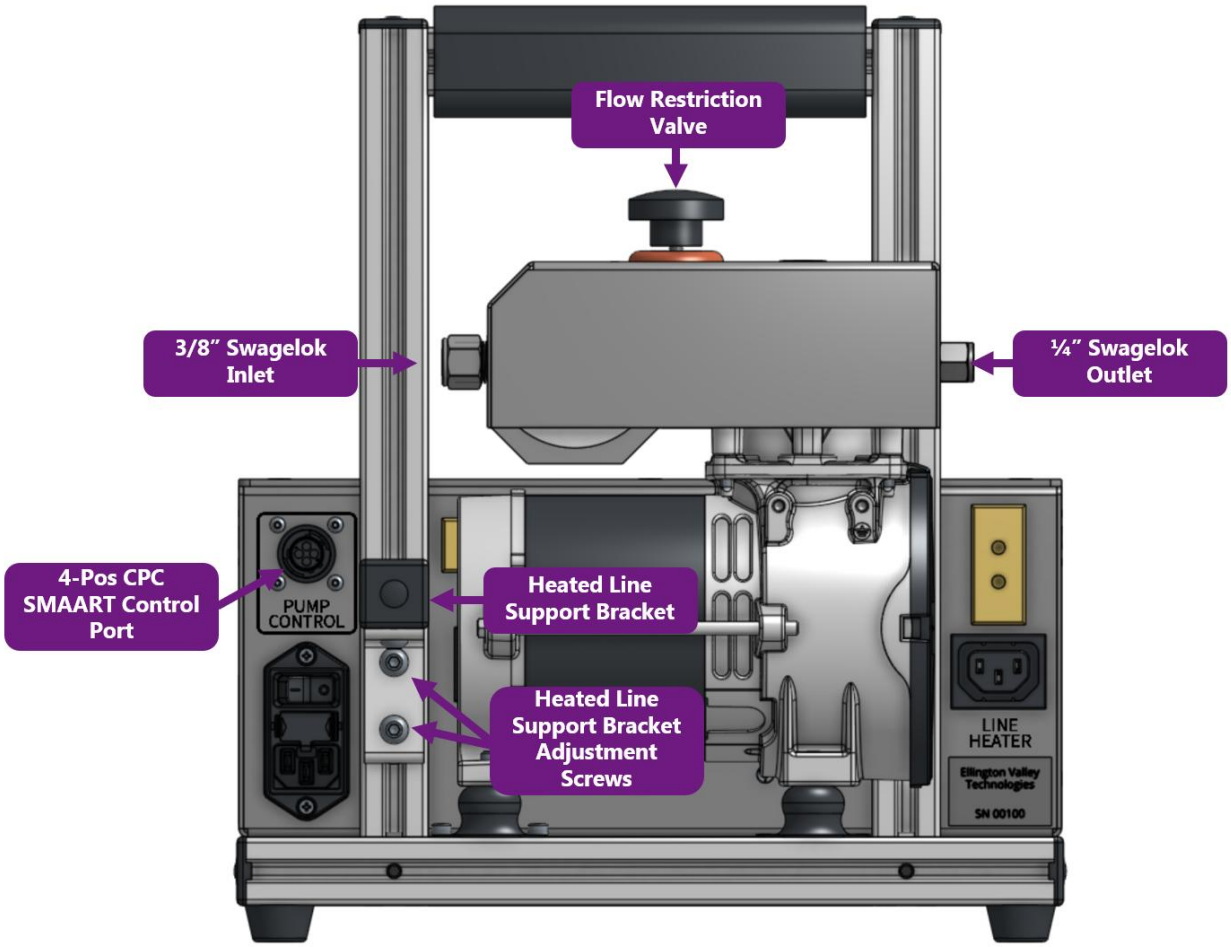

© 2026 Ellington Valley Technologies

Customer Supplied Gas Lines and Connection

Details for connections are provided in this section. Refer to the next section for instructions before powering up the system. Care should be taken not to pump gas to the analyzer until heated zones have reached temperature setpoints.

- **3/8" Swagelok Inlet Connection Port.** A 3/8" heated or unheated sample line should be connected to the inlet fitting. If there is a risk of condensation in the sample line, then a heated line should be used to prevent liquid water from reaching the pump or analyzer.

- **1/4" Swagelok Outlet Connection Port.** A 1/4" short, heated sample line should be connected from the outlet port to the analyzer inlet. The heater for this line can be controlled by the Pulse temperature controller by connecting the heater power and type K thermocouple to the corresponding electrical connectors.

- The **Heated Line Support Bracket** can be adjusted up and down the aluminum frame by loosening the **2x M6 screws** below the bracket. After the installation of a heated line, the bracket should be adjusted to support the line to not put undue stress on the pump and its vibration mounts.

- The integral **Flow Restriction Valve** can be used by the user to reduce total system flow to the desired rate. The range of the needle valve, from fully open to closed, allows for setting the full flow range possible with the pump. Setting the valve to fully closed will block the sample flow. Although this won't damage the pump, it is not recommended to deadhead the pump.

- The **4-Pos CPC SMAART™ Control Port** can be used with the included **SMAART™ Control Cable** for connection to an EVT SMAART™ Transport. This connection enables automated workflows by enabling and disabling the pump based on workflow steps.

© 2026 Ellington Valley Technologies

4. SMAART™ Pulse Setup and Use

Initial Startup

It is recommended to power up the system with the pump turned off and let the heated zones reach the desired setpoint before flowing any sample gas.

1. Set the three-position Pump Motor switch to the **OFF** position.
2. Connect Sample Inlet Line to the 3/8” Swagelok Sample Inlet Connector.
3. Connect Sample Outlet Line to the 1/4” Swagelok Sample Outlet Connector.
4. Connect the Sample Outlet Line electrical and thermocouple connectors.
5. Turn on the Pulse main power switch.
6. Set the heated zone temperature setpoints for the Filter, Pump, and Heated Line to the desired values. Verify that the heater circuit breaker switches are turned on.
7. Set the heater temperature for the 3/8” Sample Line to the desired value (external from Pulse).
8. Wait until all heated zones have reached the desired setpoints.
9. It is recommended to connect the sample outlet line to vent and then turn the Pump Motor switch position to **ON** to pump any residue from the lines or system to vent before connecting to the analyzer.
10. Use a temporary flow meter on the outlet line to adjust the Flow Restriction Valve to the desired flow rate.
11. Turn the Pump Motor switch to the **OFF** position.
12. Connect the 1/4" Sample Outlet line to the analyzer inlet.

The pump can be operated by manually switching the Pump Motor switch between OFF and ON as needed. It can also be set to AUTO to allow a SMAART™ Transport to allow remote automatic control of the pump.



Manual Pump Control

For manual control, the operator can switch the pump **ON** to start flow to the analyzer and switch the pump **OFF** to stop the flow to the analyzer.

Remote Automatic Pump Control

The SMAART™ Pulse can be controlled remotely a SMAART™ Transport system by connecting it using the SMAART™ Control Cable. The SMAART™ Transport has several operating states to control gas flow,

© 2026 Ellington Valley Technologies

and these define whether the pump should be turned on or off. This optional cable connection allows the SMAART™ Transport to remotely turn the pump on or off depending on the state of the system.

To use the remote control, set the Pump Motor switch to the AUTO position. Then operate the system from the SMAART™ Transport HMI or by using the EVT Control Software.

Heater Control Zones

The SMAART™ Pulse features three heater control channels. During extended use, tuning the control may be necessary to allow for efficient performance. See instructions in Auto-Tuning Controllers.

Short Outlet Line Heater

- This channel controls the temperature of the short, heated outlet line that connects to the analyzer. The power to this heater should be limited to 2A (<240W at 120V).
- This channel has a minimum set temperature of 0°C and a maximum set temperature of 200°C.

Pump Head Heater

- This channel is reserved to control the temperature of the heated pump head. This is controlled individually from the heated filter element to ensure consistent heating.
- This channel has a minimum set temperature of 0°C and a maximum set temperature of 150°C.

Filter Heater

- This channel is reserved to control the temperature of the heated filter housing. This is controlled individually from the heated pump head to ensure consistent heating.
- This channel has a minimum set temperature of 0°C, and a maximum set temperature of 150°C.
- The filter heater will be the slowest to respond, due to the higher thermal mass of the stainless-steel filter housing.

Temperature control is only possible when the associated circuit breaker is in the **ON** position. Otherwise, no power will flow through the heaters, even when enabled by the temperature controller.

If no thermocouple is detected, or there is an open circuit on the thermocouple, the controller will display **NO CONT** and will not heat until the issue is resolved.

© 2026 Ellington Valley Technologies

Changing Temperature Setpoints

The temperature controllers feature four buttons used to adjust settings and setpoints:

- Set 

- Cycle 
- Arrows 



The LCD screen on each control features the **PV** (Process Value), which represents the actual temperature read by the controller. This value is on the top of the screen in **red**. The lower value in **green** is the **SV** (Set Value) and represents the user setpoint.

The temperature of each controller can be adjusted by using the **ARROWS**, then confirming the set point using **SET**.

When heating, a green indicator labled **OUT** will light up while the controller is turning the heater on. This will pulse on and off as the heater reaches the desired temperature.

Auto-Tuning Controllers

When using a user-supplied short, heated line on the Line Heater port, it may be desired to tune the controller to better control the temperature of the line.

1. Adjust the setpoint of the controller to a representative number near the setpoint; the line will be running using the above instructions.

2. Press the **SET** button to open the autotune menu. This will display **AT OFF** on the LCD. Use the **ARROWS** to change the display to say **AT ON**, and confirm with **SET**.

3. A green indicator should light up on the left side of the screen reading **A/M**. This will blink periodically as the controller tunes itself automatically.

4. This process can take up to 10 minutes depending on the heater being controlled.

5. When complete, the LCD will return to the main screen automatically, and will store the values it has determined are optimal for the heater.

© 2026 Ellington Valley Technologies

Flow Control

The SMAART™ Pulse pump is capable of high flow rates, often exceeding requirements of many instrumentation setups. To accommodate for this, the SMAART™ Pulse is equipped with a heated metering valve between the filter and pump head.

The valve placement ensures that no vacuum pressure will be pulled on the filter element. The range of the needle valve, from fully open to closed, allows for setting the full flow range possible with the pump. Setting the valve to fully closed will block the sample flow. Although this won't damage the pump, it is not recommended to deadhead the pump.

SMAART™ Transport Plumbing and Control

The SMAART™ Pulse is intended to be connected to the SMAART™ Transport as shown below.

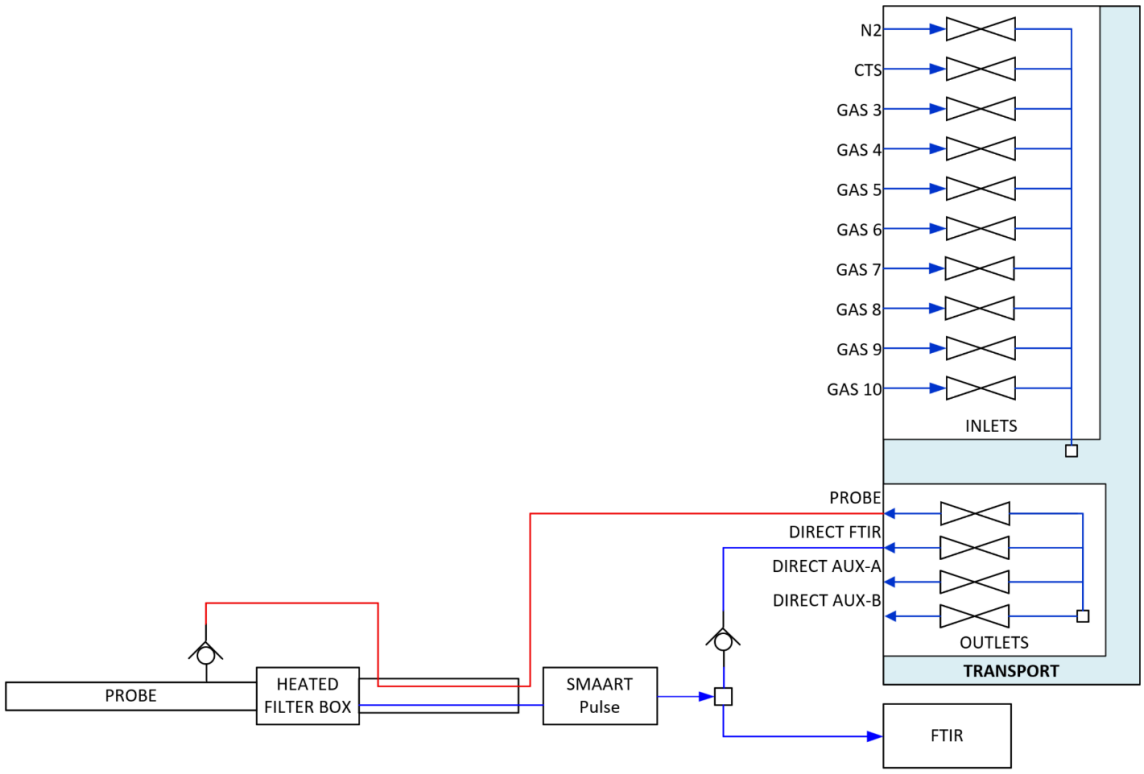

This setup allows for spike and system check gas to be supplied via the SMAART™ Transport's **Probe** port to the connected heated probe. The **Direct (FTIR)** port is connected to the outlet of the Pulse, with a tee and check valve to prevent backflow into the SMAART™ Transport system. See Appendix A. Recommended Spares for the recommended check valve. This is then connected to the user's FTIR, or similar, instrument. This allows for calibration gas to be supplied directly to the instrument.

NOTICE	The SMAART™ Pulse pump does allow limited back flow, generally 1-2LPM. This should be considered when there are stringent direct flow requirements for the instrument.

When the **Pump Control Switch** on the SMAART™ Pulse is set to **AUTO** the SMAART™ Transport will control the pump as follows:

© 2026 Ellington Valley Technologies

- When in **Sample** mode on the SMAART™ Transport unit, the pump will be automatically engaged to pull sample gas from the source to the instrument.
- When in **Direct** mode (either Direct FTIR, Direct AUX-A or Direct AUX-B), the pump will be automatically disengaged to allow for isolated direct gas sampling.

Filter Removal and Replacement

The SMAART™ Pulse is equipped with a high efficiency particulate filter. This filter is installed in a T-Handle heated filter housing enabling quick replacement during use. See Appendix A. Recommended Spares for replacement filter details.

DANGER	Before attempting to remove the filter, ensure that the pump is in the off position, and that the system has cooled to ambient temperatures to avoid injury due to excessive heat.

The T-Handle filter assembly is a turn latch that secures the handle into the housing with the attached filter. The housing is a tight press fit, and it can offer high resistance when replacing it.

To start, turn the handle of the housing to the left to release the latch and allow the filter to be pulled straight out:



The vibration mounts on the pump are flexible and will allow the pump to sway to avoid propagating vibration to the surrounding environment. To avoid stressing these mounts, take care to support the pump from the opposite side when removing or inserting the filter handle.

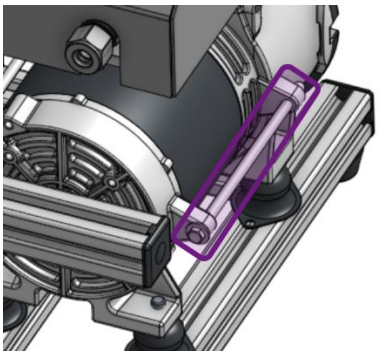

On the rear side of the SMAART™ Pulse pump, there is a support bar that can be used to stabilize the pump to assist with insertion and removal.

© 2026 Ellington Valley Technologies

Appendix A. Recommended Parts & Spares

This appendix lists recommended EVT approved parts and spares for use in the SMAART™ Pulse.

Table A.1. Recommended Parts & Spare Parts

EVT Part Number	Manufacturer	MFR PN	Purpose
114-0102	Swagelok	SS-4C-1/3	Check valve to prevent backflow.
114-0091	United Filtration Systems	12-57-70S	Filter Cartridge Replacement

© 2026 Ellington Valley Technologies